WELDEX CORPORATION
Original Equipment Manufacturer of CCD Cameras, DVR's & LCD Monitors

www.weldex.com / oem@weldex.com
Tel: (714) 761-2100 [USA]
Tel: (211) 600-7115 [GERMANY]

Digital Day&Night Vandal Resistant Dome Camera

WDD-2977C
WDD-2977VDN

MAIN FEATURES

- 1/3" Sony Super HAD CCD
- High Resolution of 600 TV Lines
- User Friendly OSD Menu Control (Internal/ External)
- Vari-Focal 2.8-11mm Auto Iris Lens (Other Vari-Focal Auto Iris Lenses Available)
- 14 Infra-Red Illuminators Provide Scene Illumination Up to 30' Distance **(WDD-2977VDN)**
- Vandal Resistant & Weatherproof Dome Camera (IP66)
- DNR (Digital Noise Reduction)
- Privacy Function
- Additional Functions (Sens-Up, Motion Detection, Mirror, Sharpness, Sync-INT/LL)
- Elegant Design

WELDEX CAN CUSTOMIZE CAMERAS FOR YOUR SPECIFIC NEED!!

WDD-2977 Series (Digital Day&Night Vandal Resistant Dome Camera)

DIMENSIONS

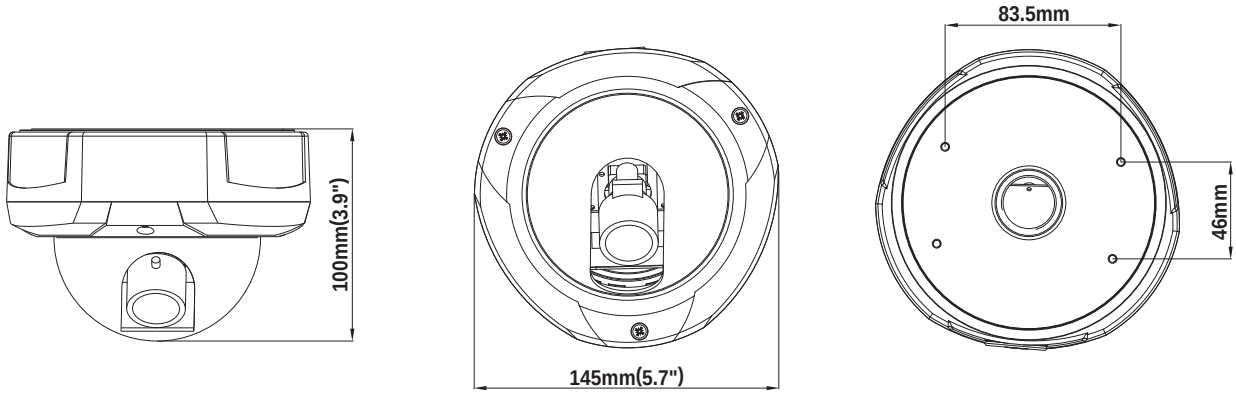

SPECIFICATIONS

MODEL		WDD-2977C		WDD-2977VDN	
Power Source & Operating Current		AC & DC Dual Power AC24V 130mA / DC12V 300mA	DC Only DC12V 140mA	AC & DC Dual Power AC24V 180mA / DC12V 450mA	DC Only DC12V 220mA
Power Source Tolerance		DC12V (Tolerance: 10V ~ 15V) / AC 24V (Tolerance: 19.6V ~ 28.8V) Regulated Power Input			
Total Pixels		NTSC : 811(H) x 508(V) / PAL : 795(H) x 596(V)			
Effective Pixels		NTSC : 768(H) x 494(V) / PAL : 795(H) x 596(V)			
Scanning System		600 TV Lines - 2:1 Interlaced			
Synchronization		INT / LL Selectable 0 ~ 359° (Adjustable)	INT X	INT / LL Selectable 0 ~ 359° (Adjustable)	INT X
Frequence		NTSC (Horizontal:15.734Khz Vertical:59.94Hz), PAL (Horizontal:15.625Khz Vertical:50.00Hz)			
H.Resolution		600 TV Lines			
Video output level		1.0Vp-p/75 (NTSC: Video 0.714Vp-p Sync 0.286Vp-p / PAL: Video 0.7Vp-p Sync 0.3Vp-p)			
S/N Ratio (Y signal)		More then 50dB (AGC Off)			
Min. Illumination		0.3 Lux / F1.2(COLOR), 0.1 Lux / F1.2(B/W), 0.002 Lux (Sens-up) , 0 Lux (IR LED On)			
COLOR		ON / AUTO			
Gain Control		OFF / LOW / MIDDLE / HIGH			
White Balance		AWT / AWC / MANUAL / 1800°K 10,500°K			
Shutter Speed		AUTO / MANUAL (NTSC : 1/60 1/120,000 sec, PAL : 1/50 1/120,000 sec)			
Sens - Up		OFF / AUTO			
OSD		Built - In & EXTERNAL TOUCH CONTROL(OPTION)			
Motion Detection		ON / OFF (4 Programmable Zone)			
DNR		OFF / LOW / MIDDLE / HIGH (Noise Reduction)			
Mirror		Built - In (Horizontal Image Inversion)			
Privacy Function		ON / OFF (4 Programmable Zone)			
Lens	Standard	Vari-Focal 2.8~11mm Auto DC Iris Lens (STD)		Vari-Focal 2.8 ~ 11mm Auto DC Iris Day & Night Lens (STD)	
	Option	Vari-Focal 9~22mm Auto DC Iris Lens			
IR LED Visibility Range	Standard	X		Visible 5mm Diameter (850nm±20°)14EA /Real(Approx 30 Feet)	
	Option	X		Visible 5mm Diameter (850nm±20°)28EA /Real(Approx 30 Feet)	
CDS Sensor(Approx)		X		IR LED On/Off at 1~5 Lux	
Operating Temperature / Humidity		14°F ~ 122°F (-10°C ~ + 50°C) / 10% - 95% RH			
Dimensions(WxHxD)		145mm x 100mm x 145mm (5.7" x 3.9" x 5.7")			
Weight(Approx.g)		400g / 0.88lbs (Without Stand Type)		420g / 0.92lbs (Without Stand Type)	
Output Cable(Approx.mm)		4 Feet Cable with BNC Female for Video / DC Jack-Male or Wire for Power			
Extra Video Terminal		Pitch 2.0mm 2PIN WAFER MOLEX (Inside Terminal NO: 53014-0210 & Outside Terminal NO: 53015-0210)			
Extra Video Check Cable(Approx.mm)		2 Feet Cable with BNC Female for Video (MOLEX Terminal Housing NO:51004-2000)			